SEPA100-M Solar Electric Power Assembly

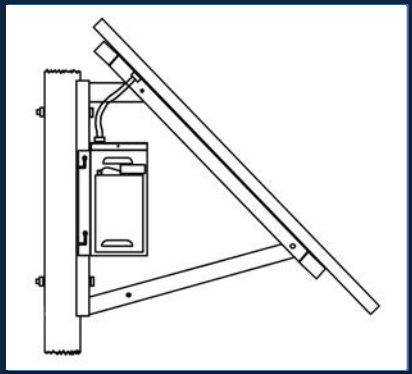

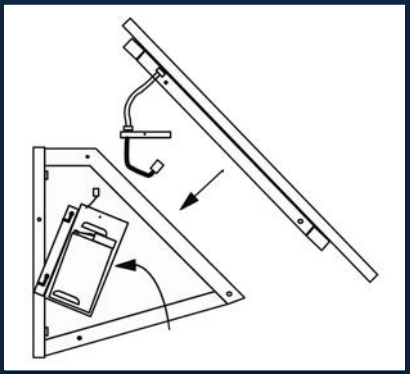

Features & Benefits:

- The SEPA100 solar electric power assembly features a single 100 Watt module mounted to our single support power bracket, optional full panel backside sheet metal protection.
- The 112 Amp hour battery assembly is contained within a vented aluminum battery box and includes a wiring harness and control electronics.
- There are over 10 different load controllers to choose from for different types of applications such as dusk to dawn, dusk activated timer, split timing, and motion activation.
- The systems consist of pre assembled sub assemblies that simply bolt together for quick and easy installation with plug and play style wire connections.
- Every system is available to produce DC or AC power depending on the needs of the load.
- Meets AASHTO wind force ratings.
- Powder coating and custom design available.
- 5 year maintenance free system, warranty up to 25 years (see warranty) and ETL Listed.

Made in USA

Solar Electric Power Company
1521 SE Palm Court, Stuart, FL 34994 | ph: 772-220-6615 | fax: 772-220-8616 | www.sepco-solarlighting.com

Specifications

Panel Assembly

A SEPA100 single array consists of one 100 Watt module which is mechanically fastened to a vented aluminum panel pan with stainless steel fasteners, optional full panel backside damage prevention, and terminated in pre-wired 3 prong Molex type connector. Solar array produces 5.46 +/- amps charge current and measures 41.8"L x 26.6"W x 1.4"D. The array has a 10 year warranty for 10% power loss and 25 year warranty for 20% power loss. Solar array has a life cycle testing and actual field proven life of over 30 years.

Battery Assembly

A vented aluminum enclosure containing one 112 amp hour sealed GEL battery, which is integrally mounted and pre-wired to include a standard wire harness with simple plug in connections for the SEPCO ALC Adaptive Lighting Control and the solar panel assembly. The low profile design contains a preformed and welded back mounting plate for easy slide on attachment to the power bracket. Battery assembly contains SEPCO unique "Through the Pole" rear wire routing output for no exposed wiring to provide a neat clean appearance for the finished installation.

The batteries are warranted for 5 years. Battery assembly is complete with all stainless steel mounting hardware. All metal crafting has been performed by high speed robotic presses using computer programmed instructions.

Power Bracket

An all aluminum, unique single support 5 or 45 degree power bracket consists of a substantial aluminum channel affording mounting to any pole or wall. Circumference welding of strong 2-1/4" aluminum square in a single support arrangement to provide maximum strength for wind loading. The power bracket contains predrilled and tapped battery slide mount bolts of stainless steel and two 11/16" mounting holes for up to 5/8" diameter mounting bolts. The bracket contains the unique "Through the Pole" wire hole for no exposed system wiring.

The SEPCO solar electric power assemblies have proven themselves as the most rugged and robust design in thousands of installations worldwide since their introduction in 1994. SEPCO systems surpass all codes, compliances, and quality controls.

Intertek 4009073

CONFORMS TO
UL STD 60950-1
UL STD 60950-22
CERTIFIED TO CSA STD
C22.2 # 60950-1
C22.2 # 60950-22

Solar Electric Power Company
1521 SE Palm Court, Stuart, FL 34994 | ph: 772-220-6615 | fax: 772-220-8616 | www.sepco-solarlighting.com